230V 1F 50/60Hz~

EXPERT 500 600

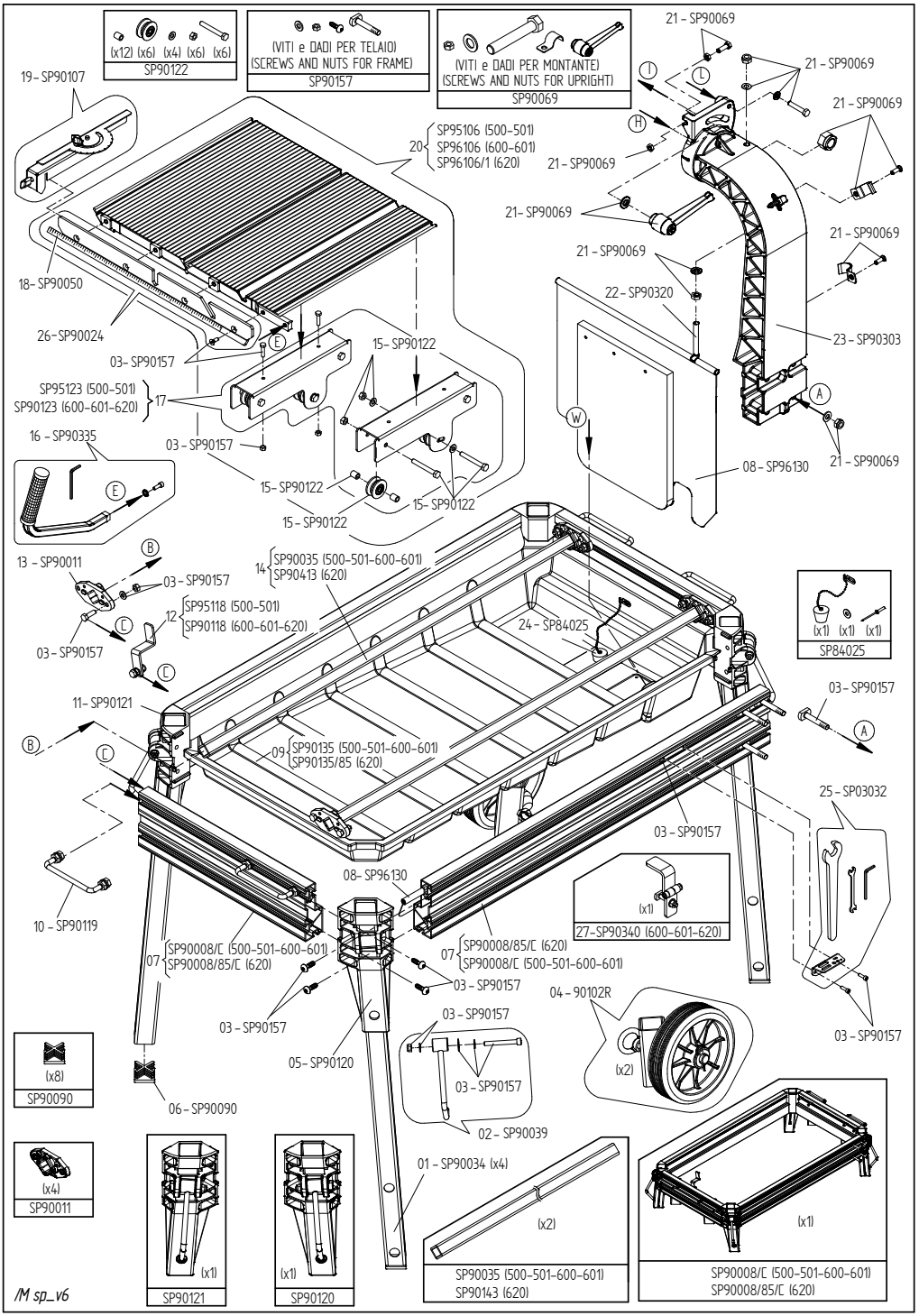

230V 1F 50/60Hz~
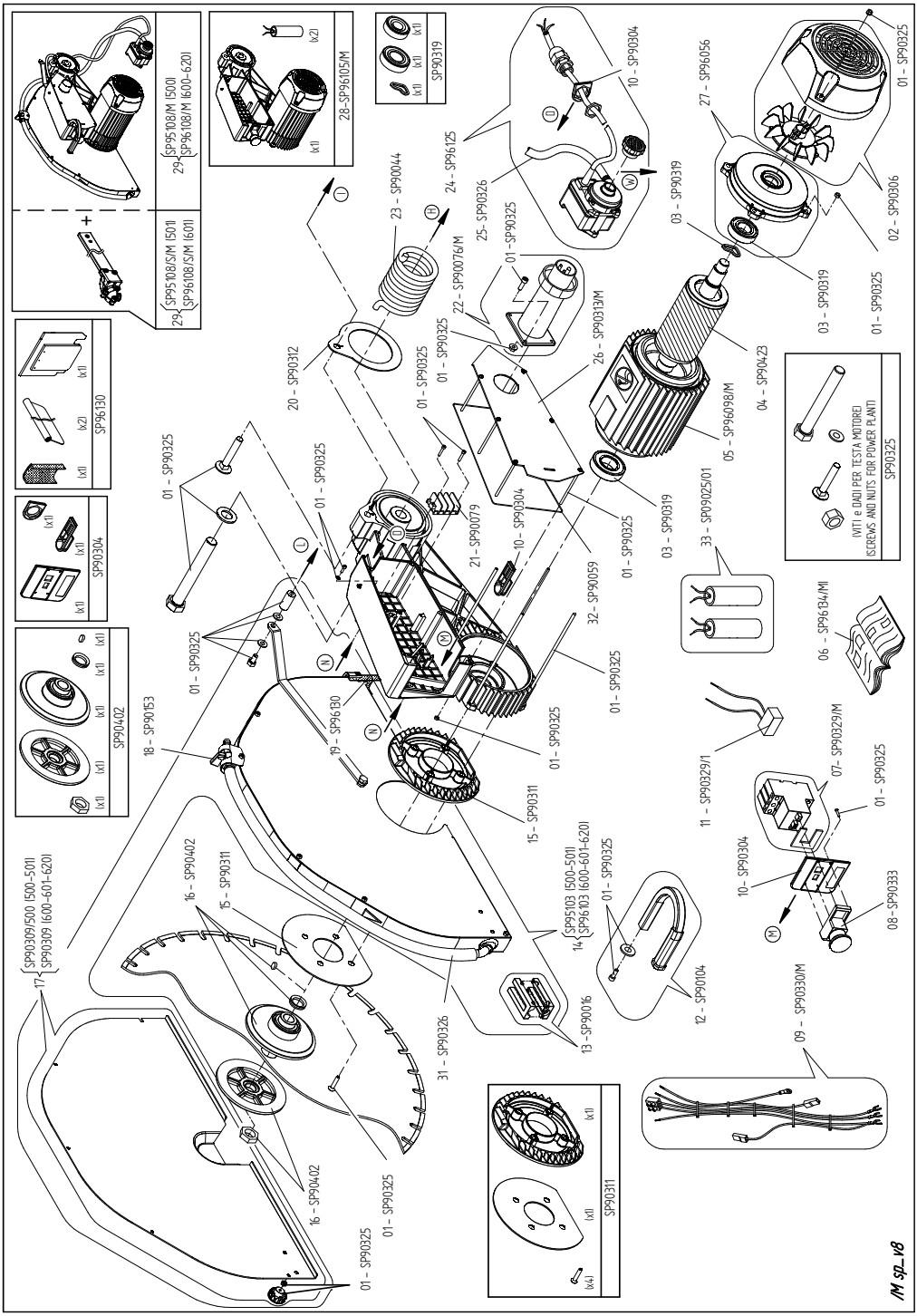
EXPERT 500 600